DRAWING DISCLAIMER:

THE DETAILS SHOWN ARE FOR FABRICATION PURPOSES ONLY. OTHERS THAN CONTECH ARE RESPONSIBLE FOR THE DESIGN DETAILS SHOWN IN THESE DRAWINGS.

CONTECH CHS™ IS A STRUCTURALLY DESIGNED FLAT PANEL HEADWALL AND WINGWALL SYSTEM CONSISTING OF A SINGLE OR MULTI BARREL PIPES DIRECT BURY WITH A 30° ANGLE OF REPOSE AND 120 PCF UNIT WEIGHT BACKFILL. THE SYSTEM IS DESIGNED TO HANDLE HL-93 LIVE LOAD CONDITIONS, VEHICLES NO CLOSER THAN 1 FOOT FROM THE WALL. NO UNBALANCED HYDROSTATIC LOADING IS CONSIDERED. ALL OTHER ASPECTS OF THE DESIGN ARE TO BE COMPLETED BY OTHERS. NO SITE-SPECIFIC HYDRAULIC DESIGN OR SCOUR PREVENTION COUNTERMEASURES HAVE BEEN EVALUATED. FIELD ASSEMBLY AND INSTALLATION IS THE RESPONSIBILITY OF THE CONTRACTOR.

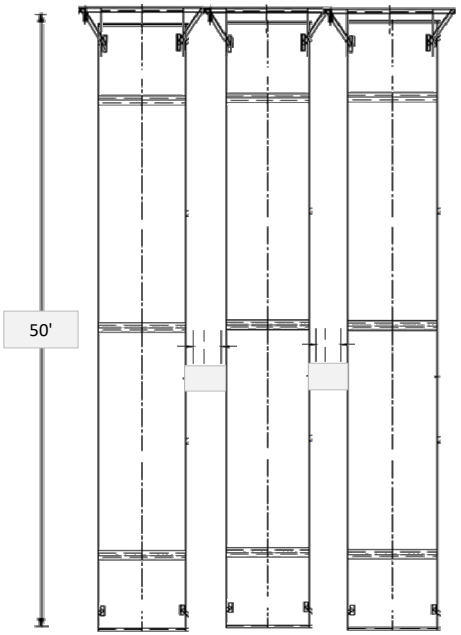

THE UNDERSIGNED HEREBY APPROVES THE ATTACHED PAGE(S) INCLUDING THE FOLLOWING:

° WALL TYPE = SOLID

° DIAMETER = 66"

° PIPE MATERIAL = 3 X 1 Aluminum Alloy Pipe, 12-gage

CUSTOMER

DATE

The design and information shown on this drawing is provided as a service to the project owner, engineer and contractor by Contech Engineered Solutions LLC ("Contech"). Neither this drawing, nor any part thereof, may be used, reproduced or modified in any manner without the prior written consent of Contech. Failure to comply is done at the user's own risk and Contech expressly disclaims any liability or responsibility for such use. If discrepancies between the supplied information upon which the drawing is based and actual field conditions are encountered as site work progresses, these discrepancies must be reported to Contech immediately for re-evaluation of the design. Contech accepts no liability for designs based on missing, incomplete or inaccurate information supplied by others.

MARK	DATE	REVISION DESCRIPTION	BY

CONTECH ENGINEERED SOLUTIONS
A QUIKRETE COMPANY
www.ContechES.com
9100 Centre Pointe Dr., Suite 400, West Chester, OH 45069
800-338-1122 513-645-7000 513-645-7993 FAX

PIPE SOLUTIONS
CONTECH FABRICATION DRAWING

CMP HEADWALL - -

ALASKA RR POTTER MARSH

ANCHORAGE, AK

SITE DESIGNATION: DRAINAGE

PROJECT No:	SEQ No:	11/21/2025
DRAWN:	JAS	
CHECKED:	APPROVED:	

NOTES:

1. BRACING SHALL BE AS SHOWN OR APPROVAL EQUAL.
2. CULVERT PIPES SHALL BE 12GA WITH 3x1 CORRUGATION.
3. ALL SHEET PILE SHALL BE INTERLOCKED.
4. FOR PIPES 40'-0" AND LONGER WITH LESS THAN 1'-0" DROP BETWEEN INLET AND OUTLET. THE HEADWALL MAY BE CONSTRUCTED PERPENDICULAR TO THE CENTERLINE IN LEIU OF VERTICAL.
5. HEADWALLS SHALL BE ASSEMBLED IN YARD PRIOR TO SHIPMENT TO ENSURE PROPER FIT AND BOLT ALIGNMENT.
6. L 2"X2"X1/4"X2"-6" LENGTH SHALL BE ADJUSTED AS NECESSARY.
7. ALL EXPOSED STEEL SURFACES ON PIPES AND HEADWALLS SHALL BE PAINTED WITH TWO COATS OF CROWN PAINT COMPANY GRAY ZINC RICH PRIMER OR APPROVED EQUIVALENT PRODUCT.

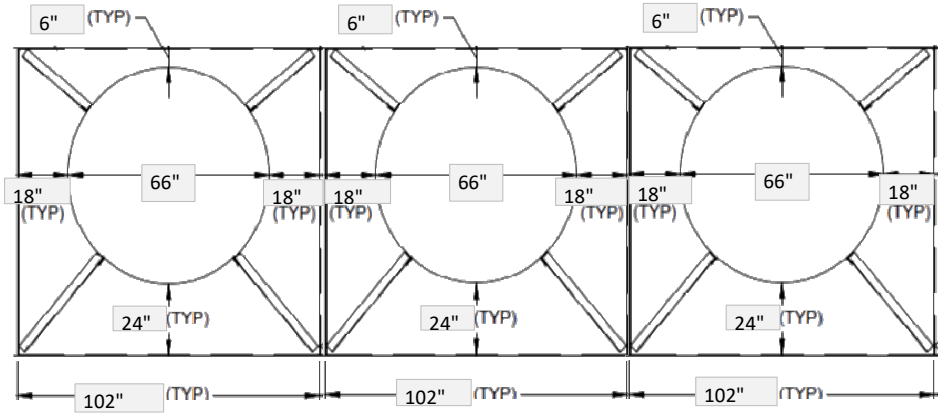

METAL HEADWALL & WINGWALL DETAILS

NOT TO SCALE

The design and information shown on this drawing is provided as a service to the project owner, engineer and contractor by Contech Engineered Solutions LLC ("Contech"). Neither this drawing, nor any part thereof, may be used, reproduced or modified in any manner without the prior written consent of Contech. Failure to comply is done at the user's own risk and Contech expressly disclaims any liability or responsibility for such use. If discrepancies between the supplied information upon which the drawing is based and actual field conditions are encountered as site work progresses, these discrepancies must be reported to Contech immediately for re-evaluation of the design. Contech accepts no liability for designs based on missing, incomplete or inaccurate information supplied by others.

MARK	DATE	REVISION DESCRIPTION	BY

CONTECH ENGINEERED SOLUTIONS
A QUIKRETE® COMPANY
www.ContechES.com
9100 Centre Pointe Dr., Suite 400, West Chester, OH 45069
800-338-1122 513-645-7000 513-645-7993 FAX

PIPE SOLUTIONS
CONTECH FABRICATION DRAWING

-CMPHW-FAB-A

CMP HEADWALL - -

ALASKA RR POTTER MARSH

ANCHORAGE, AK

SITE DESIGNATION: DRAINAGE

PROJECT No:	SEQ No:	11/21/2025
DRAWN:	JAS	
CHECKED:	APPROVED:	